Projects of Arduino

BY ENG : Mohammad ElPrince

1. Blink using millis ( )

```
#define LED 13
int t1;
bool flag=false;
void setup() {
  // put your setup code here, to run once:
  pinMode(LED,OUTPUT);
  t1=millis();
}
```

```
void loop() {
  // put your main code here, to run repeatedly:
  if (!flag){
    if ((millis()-t1)<2000){
      digitalWrite(LED,HIGH);
    }
    else{
      t1=millis();
      flag=true;
    }
  }
  else{
    if ((millis()-t1)<1000){
      digitalWrite(LED,LOW);
    }
    else{
      t1=millis();
      flag=false;
    }
  }
}
```

2. Switch the led on and off using one button switch

```
#define LED 13
#define SW A0
bool flag=true;

void setup() {
  // put your setup code here, to run once:
  pinMode(LED,OUTPUT);
  pinMode(SW,INPUT);
}
void loop() {
  // put your main code here, to run repeatedly:
  if (digitalRead(SW)==HIGH){
    flag=!flag;
  }
  if (flag){
    digitalWrite(LED,HIGH);
  }
  else{
    digitalWrite(LED,LOW);
  }
}
```

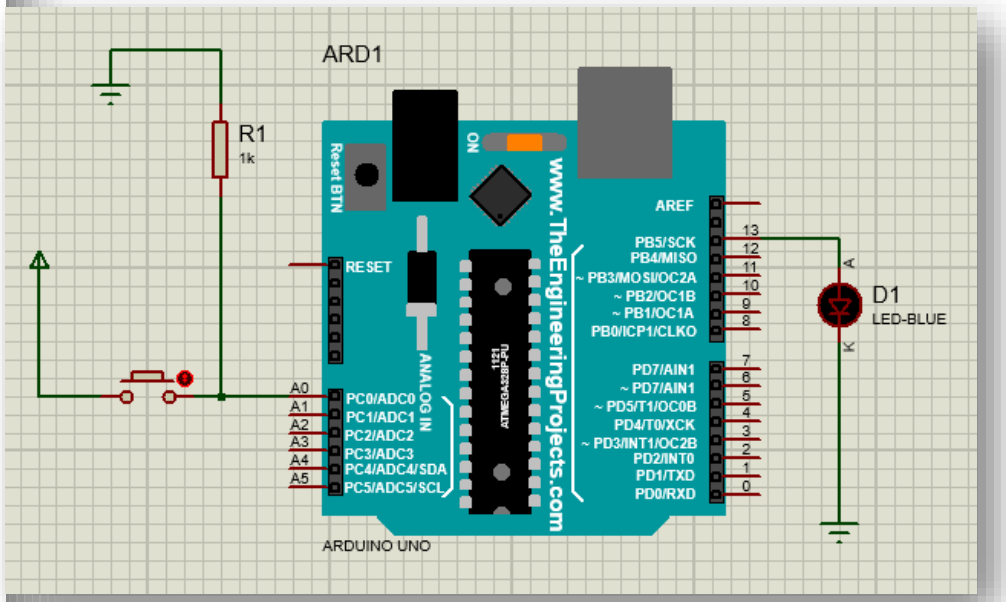

3. Traffic light

```
#define LED1 13
#define LED2 12
#define LED3 11
int t1;
int c;
void setup() {
  // put your setup code here, to run once:
  pinMode(LED1,OUTPUT);
  pinMode(LED2,OUTPUT);
  pinMode(LED3,OUTPUT);
  c=1;
  t1=millis();
}
```

```
void loop() {
  // put your main code here, to run repeatedly:
  if ((millis()-t1)<2000){
    if (c==1){
      digitalWrite(LED3,LOW);
      digitalWrite(LED1,HIGH);
    }
    else if(c==2){
      digitalWrite(LED1,LOW);
      digitalWrite(LED2,HIGH);
    }
    else if (c==3){
      digitalWrite(LED2,LOW);
      digitalWrite(LED3,HIGH);
    }
  }
  else{
    c++;
    t1=millis();
    if (c==4){
      c=1;
    }
  }
}
```

4. Controlling a car using switches

```
#define M1_w1 10
#define M1_w2 11
#define M2_w1 12
#define M2_w2 13
#define sw_front A0
#define sw_back A1
#define sw_right A2
#define sw_left A3
void setup() {
  // put your setup code here, to run once:
  pinMode(M1_w1,OUTPUT);
  pinMode(M1_w2,OUTPUT);
  pinMode(M2_w1,OUTPUT);
  pinMode(M2_w2,OUTPUT);
  pinMode(sw_front,INPUT);
  pinMode(sw_back,INPUT);
  pinMode(sw_right,INPUT);
  pinMode(sw_left,INPUT);
}
```

```
void loop() {
  // put your main code here, to run repeatedly:
  if (digitalRead(sw_front)==HIGH){
    digitalWrite(M1_w1,HIGH);
    digitalWrite(M1_w2,LOW);
    digitalWrite(M2_w1,HIGH);
    digitalWrite(M2_w2,LOW);
  }
  else if(digitalRead(sw_back)==HIGH){
    digitalWrite(M1_w2,HIGH);
    digitalWrite(M1_w1,LOW);
    digitalWrite(M2_w2,HIGH);
    digitalWrite(M2_w1,LOW);
  }
  else if(digitalRead(sw_left)==HIGH){
    digitalWrite(M1_w2,HIGH);
    digitalWrite(M1_w1,LOW);
    digitalWrite(M2_w1,HIGH);
    digitalWrite(M2_w2,LOW);
  }
  else if(digitalRead(sw_right)==HIGH){
    digitalWrite(M1_w2,LOW);
    digitalWrite(M1_w1,HIGH);
    digitalWrite(M2_w1,LOW);
    digitalWrite(M2_w2,HIGH);
  }
}
```

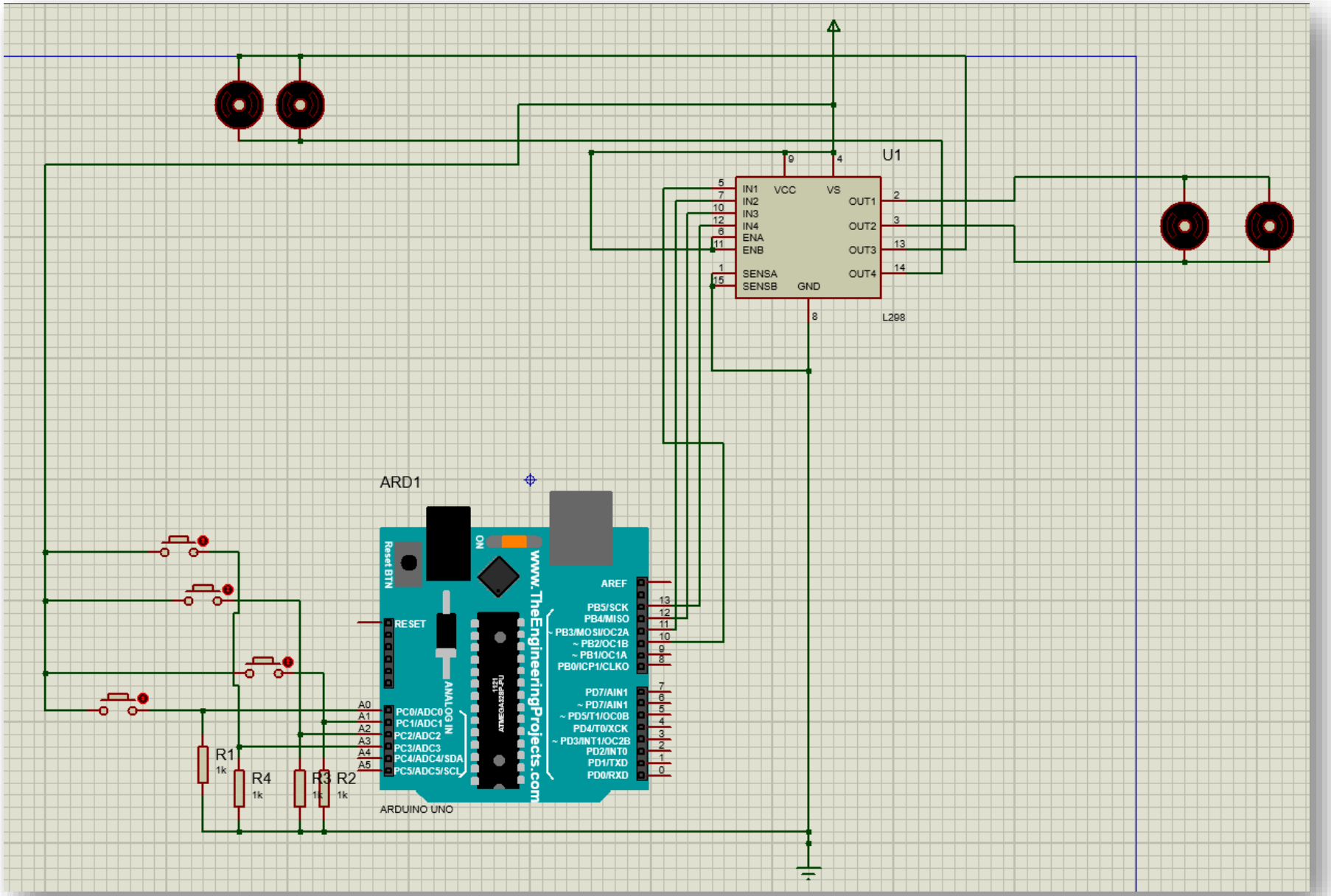
U1
IN1
IN2
IN3
IN4
ENA
ENB
SENSA
SENSB
VCC
VS
GND
OUT1
OUT2
OUT3
OUT4
L298
ARD1
Reset BTN
ON
RESET
ANALOG IN
AREF
PB5/SCK
PB4/MISO
~ PB3/MOSI/OC2A
~ PB2/OC1B
~ PB1/OC1A
PB0/ICP1/CLKO
PD7/AIN1
~ PD7/AIN1
~ PD5/T1/OC0B
PD4/T0/XCK
~ PD3/INT1/OC2B
PD2/INT0
PD1/TXD
PD0/RXD
PC0/ADC0
PC1/ADC1
PC2/ADC2
PC3/ADC3
PC4/ADC4/SDA
PC5/ADC5/SCL
A0
A1
A2
A3
A4
A5
ATMEGA328P-PU
www.TheEngineeringProjects.com
ARDUINO UNO
R1
R4
R3
R2
1k

5. Calculator program

```
#include <Keypad.h>
#include <LiquidCrystal.h>
const int ROW_NUM = 4;    //four rows
const int COLUMN_NUM = 4; //three columns
char num1=0;
char num2=0;
char op;
int t1;
char key;
int c;
bool flag=false;
char keys[ROW_NUM][COLUMN_NUM] = {
  {'1','2','3','/'},
  {'4','5','6','*'},
  {'7','8','9','-'},
  {'c','0','=','+'}
};
byte pin_rows[ROW_NUM] = {A0,A1, A2, A3}; //connect to the row pinouts of the keypad
byte pin_column[COLUMN_NUM] = {12,11, 10, 9}; //connect to the column pinouts of the keypad
Keypad keypad = Keypad( makeKeymap(keys), pin_rows, pin_column, ROW_NUM, COLUMN_NUM );
const int rs = 0, en = 1, d4 = 5, d5 = 4, d6 = 3, d7 = 2;
LiquidCrystal lcd(rs, en, d4, d5, d6, d7);
void setup() {
  // put your setup code here, to run once:
  lcd.begin(8,2);
  c=0;
}
```

```
float calc(char num1,char num2,char op){
  num1 -='0';
  num2 -='0';
  if (op=='/'){
    if (num2==0){
      return 'E';
    }
    return (float)num1/num2;
  }
  else if(op=='*'){

    return (float)num1*num2;

  }
  else if(op=='+'){
    return num1+num2;
  }
  else if(op=='-'){
    return num1-num2;
  }
  else{
    return 'E';
  }

}
```

```
void loop() {
  // put your main code here, to run repeatedly:
  key=keypad.getKey();
  if (key){
    if (key=='c'){
      lcd.clear();
      c=0;
      flag=false;
    }
    else{
      lcd.print(key);
      if (c==0){
        if (isdigit(key)){
          num1=key;
          c+=1;

        }
      }
      else if(c==1){

        op=key;
        c+=1;
      }
      else if(c==2){
        if (isdigit(key)){
          num2=key;
          c+=1;
        }
      }
```

```
      else{
        if (!flag){
          lcd.print(calc(num1,num2,op));
          t1=millis();
          flag=true;
        }
        else{
          if ((millis()-t1)>1000){
            flag=false;
            c=0;
          }
        }
      }

    }
  }
}
```

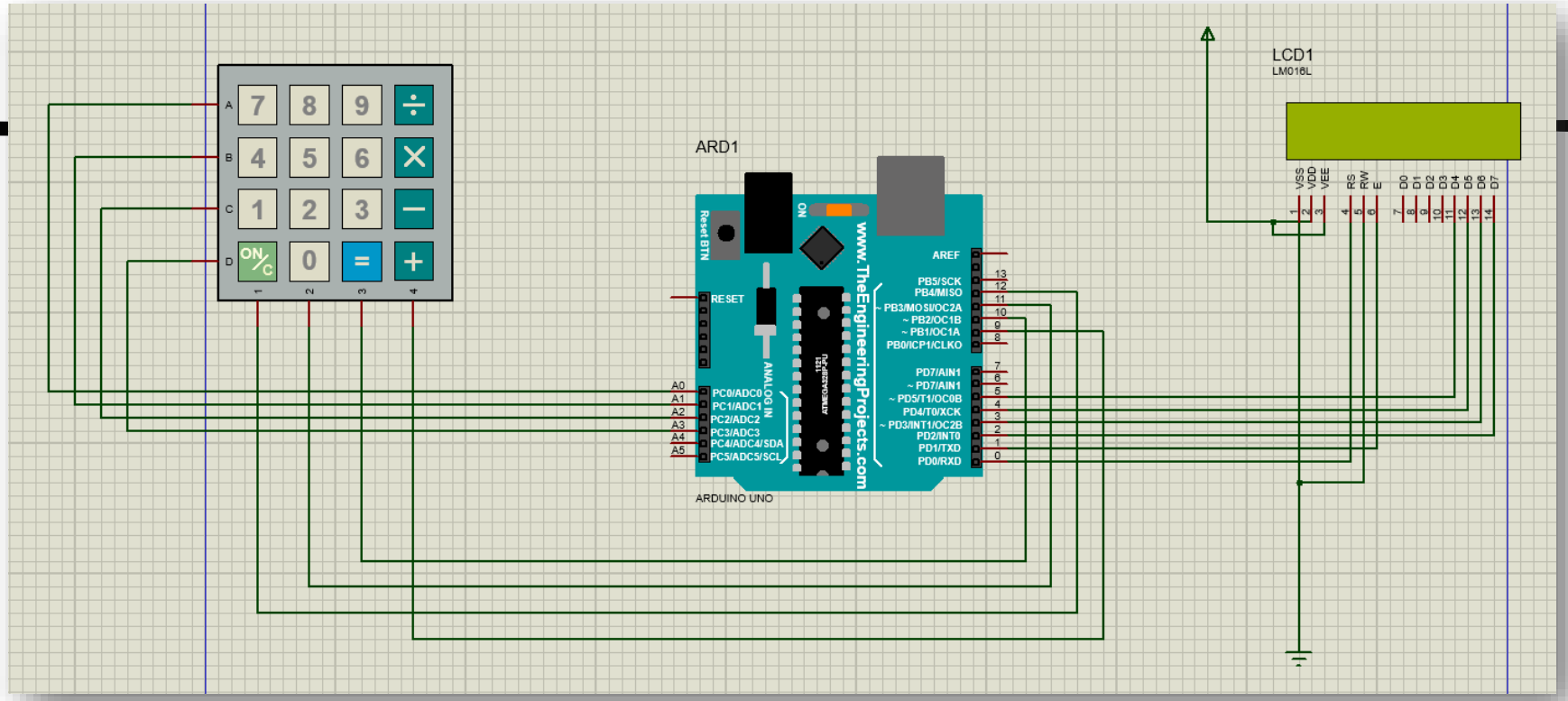

Note : In the main code we need to edit the keys array as in the proteus to be correct here , but we have coded it according to the external keypad .

6. (5v-range) Voltmeter

```c
#include<LiquidCrystal.h>
#define I A0
const int d7=0,d6=1,d5=2,d4=3,en=4,rs=5;
int n;
float v;
LiquidCrystal lcd(rs,en,d4,d5,d6,d7);
void setup() {
  // put your setup code here, to run once:
  lcd.begin(8,2);
  pinMode(I,INPUT);
}

void loop() {
  // put your main code here, to run repeatedly:
  n=analogRead(I);
  v= n * (5.0/1024);
  lcd.print(v);
  delay(100);
  lcd.clear();
}
```

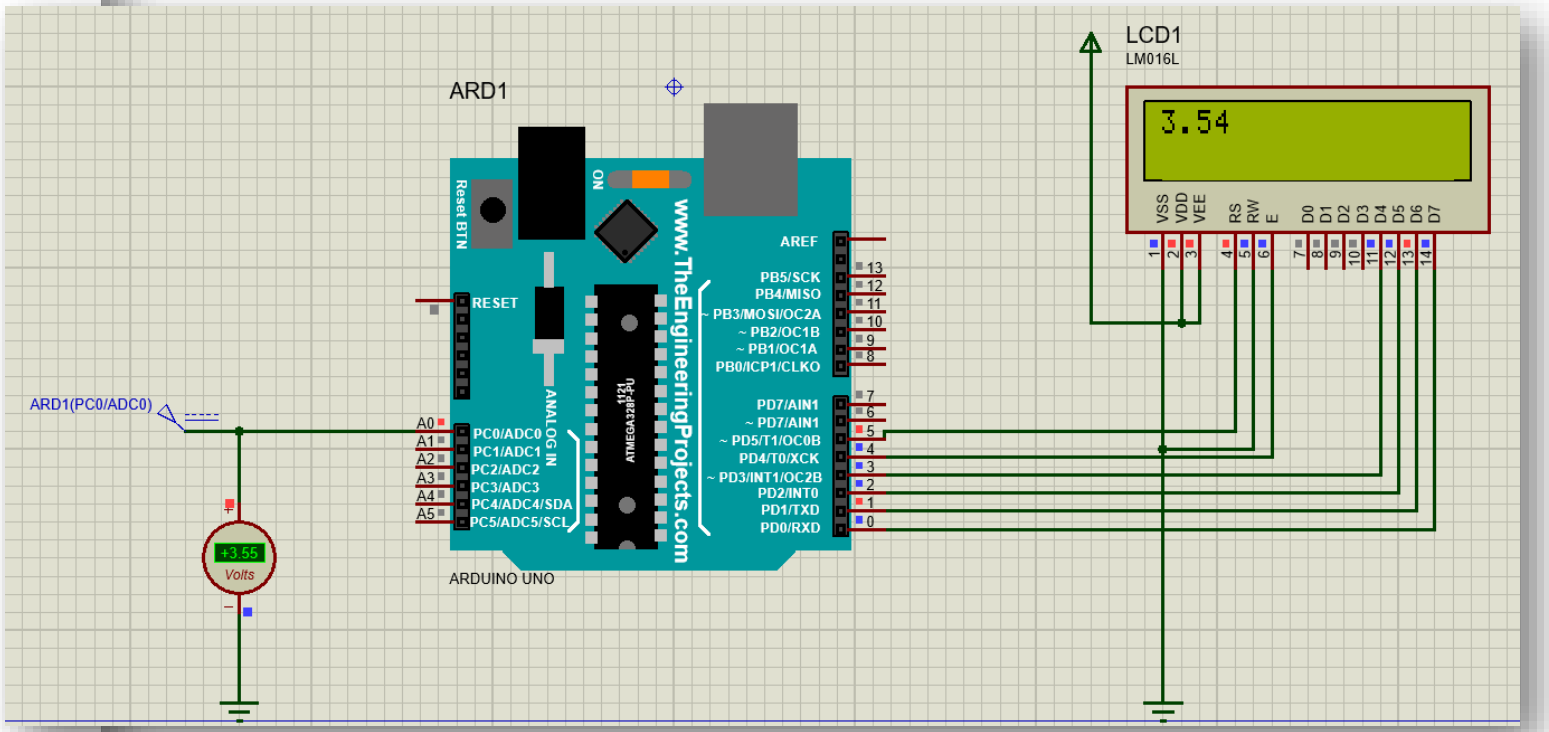

7. Temperature Reader

```c
#include<LiquidCrystal.h>
#define I A0
const int d7=0,d6=1,d5=2,d4=3,en=4,rs=5;
int n;
float v;
float t;
LiquidCrystal lcd(rs,en,d4,d5,d6,d7);
void setup() {
  // put your setup code here, to run once:
  lcd.begin(8,2);
  pinMode(I,INPUT);
}

void loop() {
  // put your main code here, to run repeatedly
  n=analogRead(I);
  v= n * (5.0/1024);
  t=v * 100 ;
  lcd.print(t);
  delay(100);
  lcd.clear();
}
```

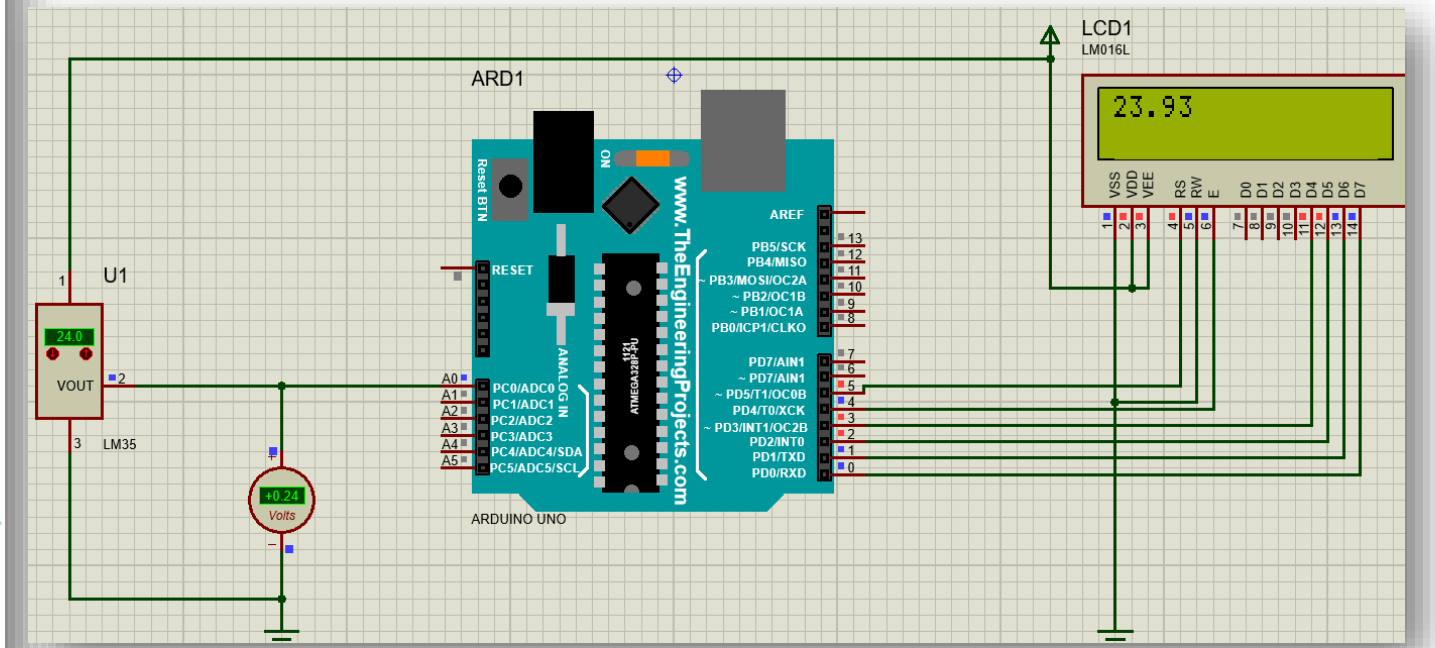

8. Seconds Counter

```
#define EN_r 11
#define EN_l 12
int t1;
void setup() {
  // put your setup code here, to run once:
  DDRD=0b00001111;
  PORTD=0b00000000;
}
void loop() {
  // put your main code here, to run repeatedly:
  for (int i=0;i<=9;i++){
    for (int j=0;j<=9;j++){
      t1=millis();
      while ((millis()-t1)<1000){
        digitalWrite(EN_l,LOW);
        PORTD=j;
        digitalWrite(EN_r,HIGH);
        delay(10);
        digitalWrite(EN_r,LOW);
        PORTD=i;
        digitalWrite(EN_l,HIGH);
        delay(10);
      }
    }
  }
}
```

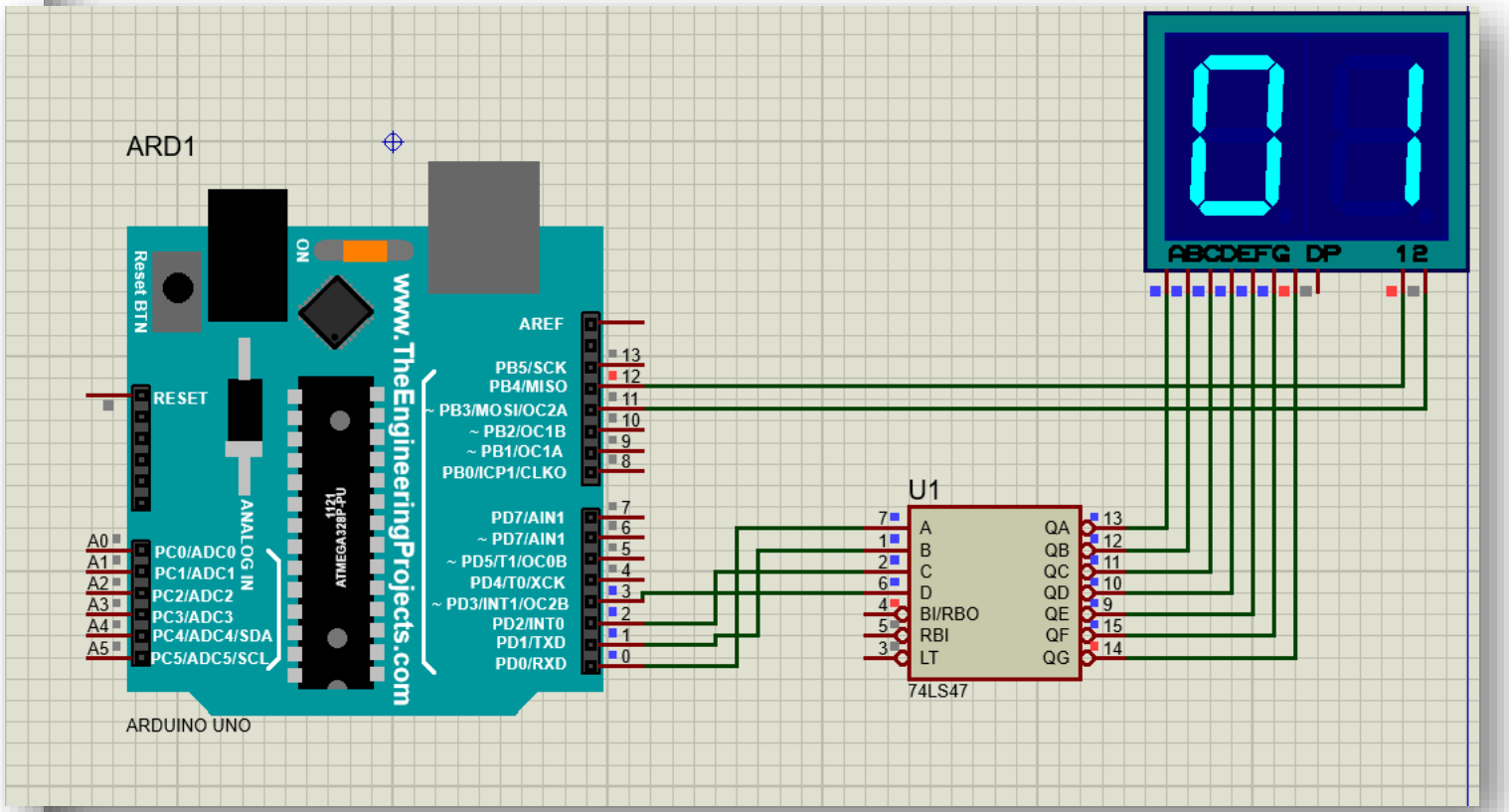

9. Digital Clock

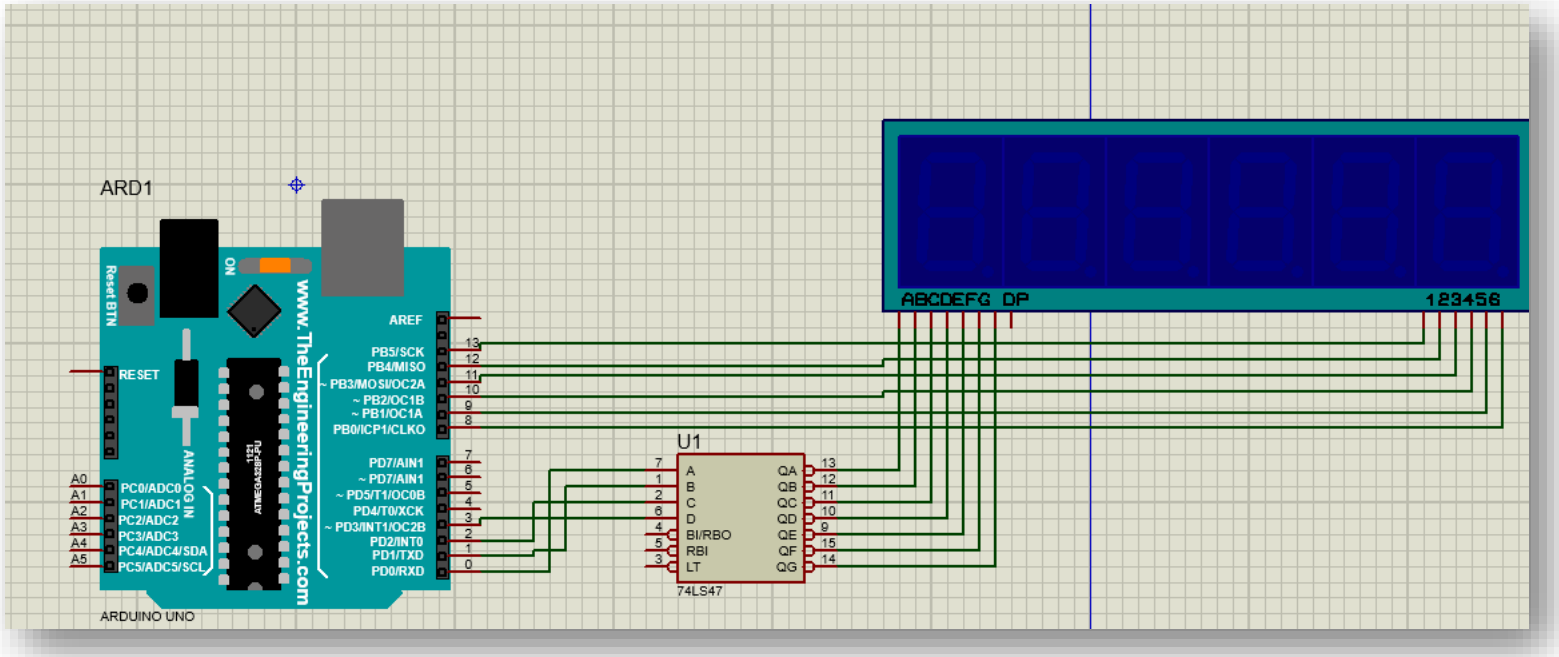

The CODE :

```
// digital clock
#define EN1 13
#define EN2 12
#define EN3 11
#define EN4 10
#define EN5 9
#define EN6 8
bool flag=false;
void setup() {
  // put your setup code here, to run once:
  DDRD=0b00001111;
  PORTD=0b00000000;
  pinMode(EN1,OUTPUT);
  pinMode(EN2,OUTPUT);
  pinMode(EN3,OUTPUT);
  pinMode(EN4,OUTPUT);
  pinMode(EN5,OUTPUT);
  pinMode(EN6,OUTPUT);
}
int t1;
void loop() {
  // put your main code here, to run repeatedly:
  for (char i=0;i<=2;i++){
    for(char k=0;k<4;k++){
      for (char u=0;u<=5;u++){
        for (char l=0;l<=9;l++){
          for (char c=0;c<=5;c++){
            for (char j=0;j<=9;j++){
              t1=millis();
              t1=millis();
              while((millis()-t1)<1000){
                digitalWrite(EN1,LOW);
                digitalWrite(EN2,LOW);
                digitalWrite(EN3,LOW);
                digitalWrite(EN4,LOW);
                digitalWrite(EN5,LOW);
                PORTD=j;
                digitalWrite(EN6,HIGH);
                delay(2);
                digitalWrite(EN1,LOW);
                digitalWrite(EN2,LOW);
                digitalWrite(EN3,LOW);
                digitalWrite(EN4,LOW);
                digitalWrite(EN6,LOW);
                PORTD=c;
                digitalWrite(EN5,HIGH);
                delay(2);
                digitalWrite(EN1,LOW);
                digitalWrite(EN2,LOW);
                digitalWrite(EN3,LOW);
                digitalWrite(EN5,LOW);
                digitalWrite(EN6,LOW);
                PORTD=l;
                digitalWrite(EN4,HIGH);
                delay(2);
                digitalWrite(EN1,LOW);
                digitalWrite(EN2,LOW);
                digitalWrite(EN4,LOW);
                digitalWrite(EN5,LOW);
                digitalWrite(EN6,LOW);
                digitalWrite(EN2,LOW);
                digitalWrite(EN4,LOW);
                digitalWrite(EN5,LOW);
                digitalWrite(EN6,LOW);
                PORTD=u;
                digitalWrite(EN3,HIGH);
                delay(2);
                digitalWrite(EN1,LOW);
                digitalWrite(EN3,LOW);
                digitalWrite(EN4,LOW);
                digitalWrite(EN5,LOW);
                digitalWrite(EN6,LOW);
                PORTD=k;
                digitalWrite(EN2,HIGH);
                delay(2);
                digitalWrite(EN2,LOW);
                digitalWrite(EN3,LOW);
                digitalWrite(EN4,LOW);
                digitalWrite(EN5,LOW);
                digitalWrite(EN6,LOW);
                PORTD=i;
                digitalWrite(EN1,HIGH);
                delay(2);
              }
            }

          }
        }
      }
    }
  }
}
```

10. Controlling The car Motors using Bluetooth

```
#define TX 0
#define RX 1

void setup() {
  // put your setup code here, to run once:
  Serial.begin(9600);
  DDRB=0b00001111;
}
char s;
void loop() {
  // put your main code here, to run repeatedly:
  if (Serial.available()){
    s = Serial.read();
    if (isalpha(s)){
      if (s=='R'){
        PORTB=0b00001001;
      }
      else if(s=='L'){
        PORTB=0b00000110;
      }
      else if(s=='F'){
        PORTB=0b00000101;
      }
      else if(s=='B'){
        PORTB=0b00001010;
      }
      else {
        PORTB=0b00000000;
      }
    }
  }
}
```

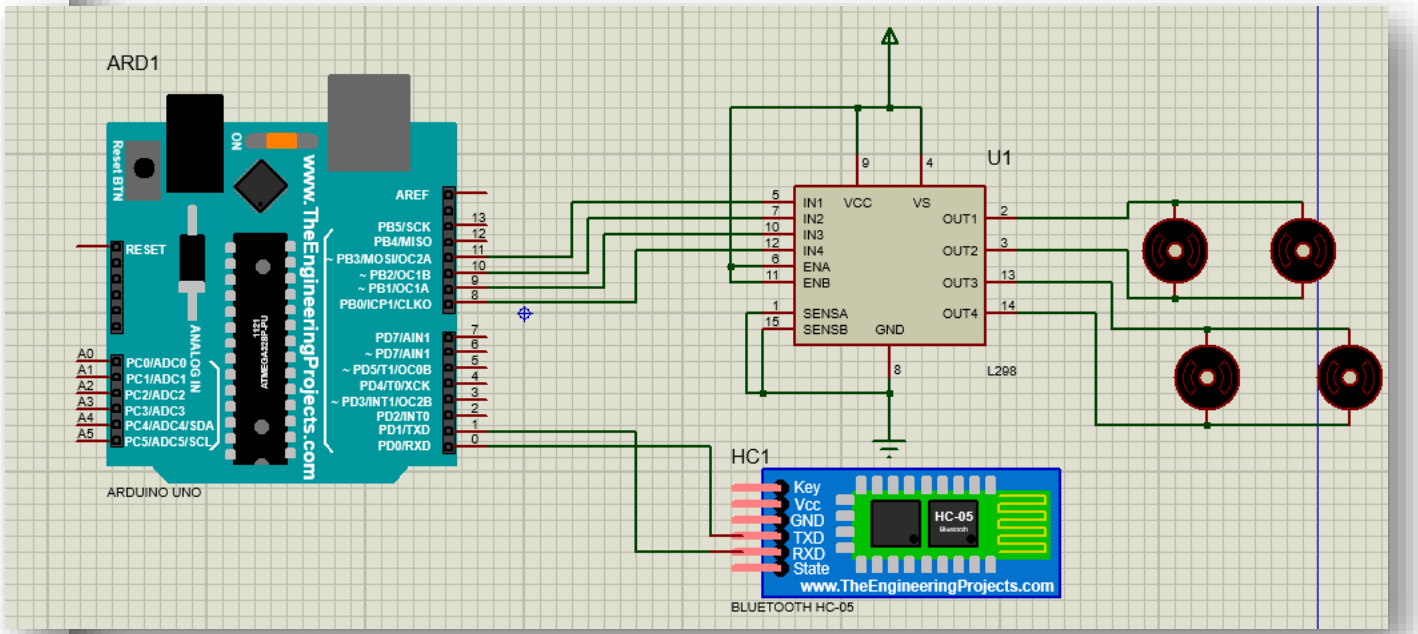

✓ Ultra sonic applications

- we have already taken an important example for ultra sonic sensors in the lectures .

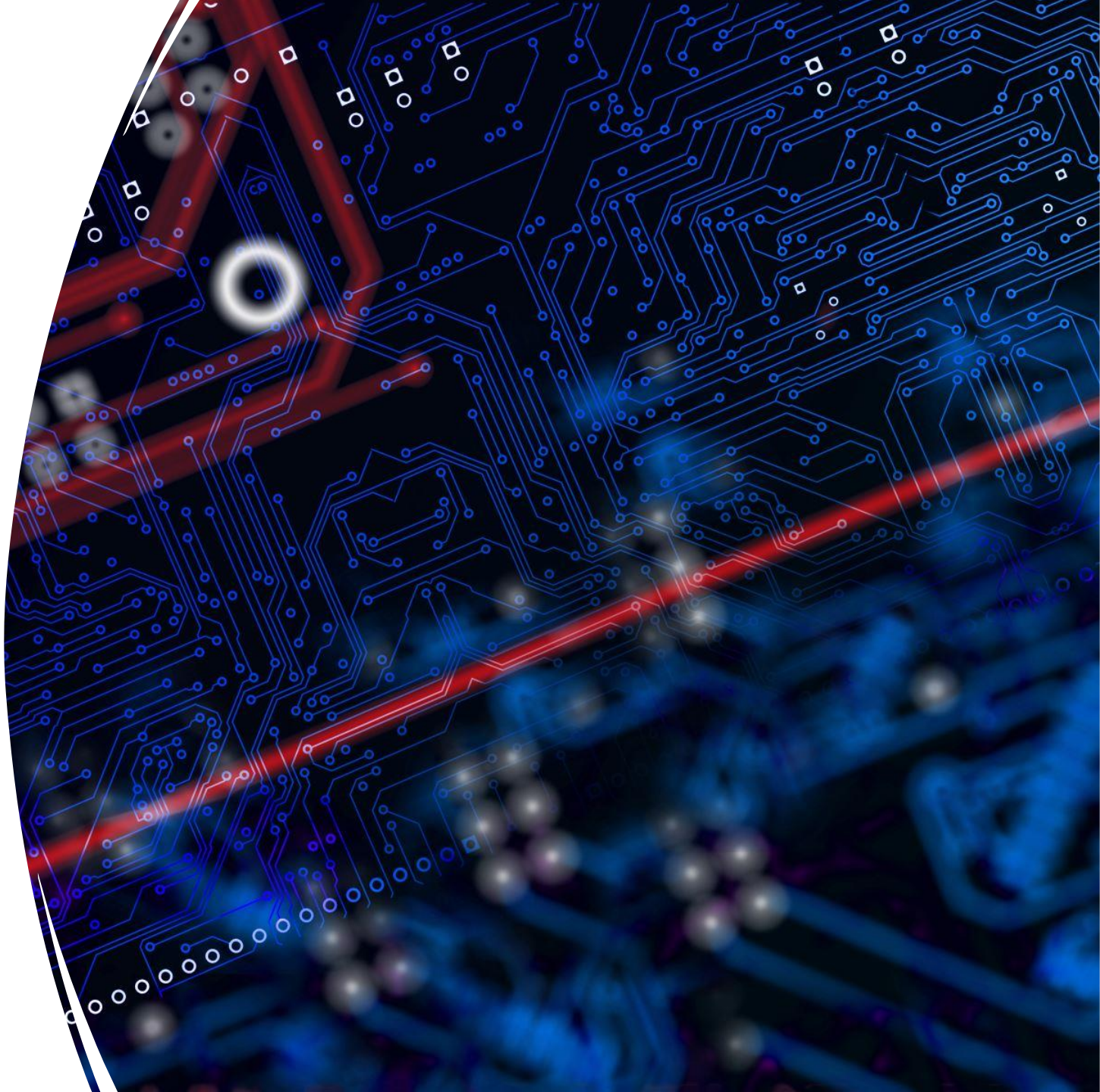

11. Simple winch code using servo motor and interrupters .

```
#include <Servo.h>
Servo servo1;
#define servo_pin 5
#define SW 2
bool flag=false;
void setup() {
  // put your setup code here, to run once:
  pinMode(SW,INPUT);
  servo1.attach(servo_pin);
  servo1.write(0);
  attachInterrupt(digitalPinToInterrupt(SW),sw_com,FALLING);
}
void loop() {
  // put your main code here, to run repeatedly:
  if (flag){
    servo1.write(90);
  }
  else{
    servo1.write(0);
  }
}
void sw_com(){
  flag=!flag;
}
```

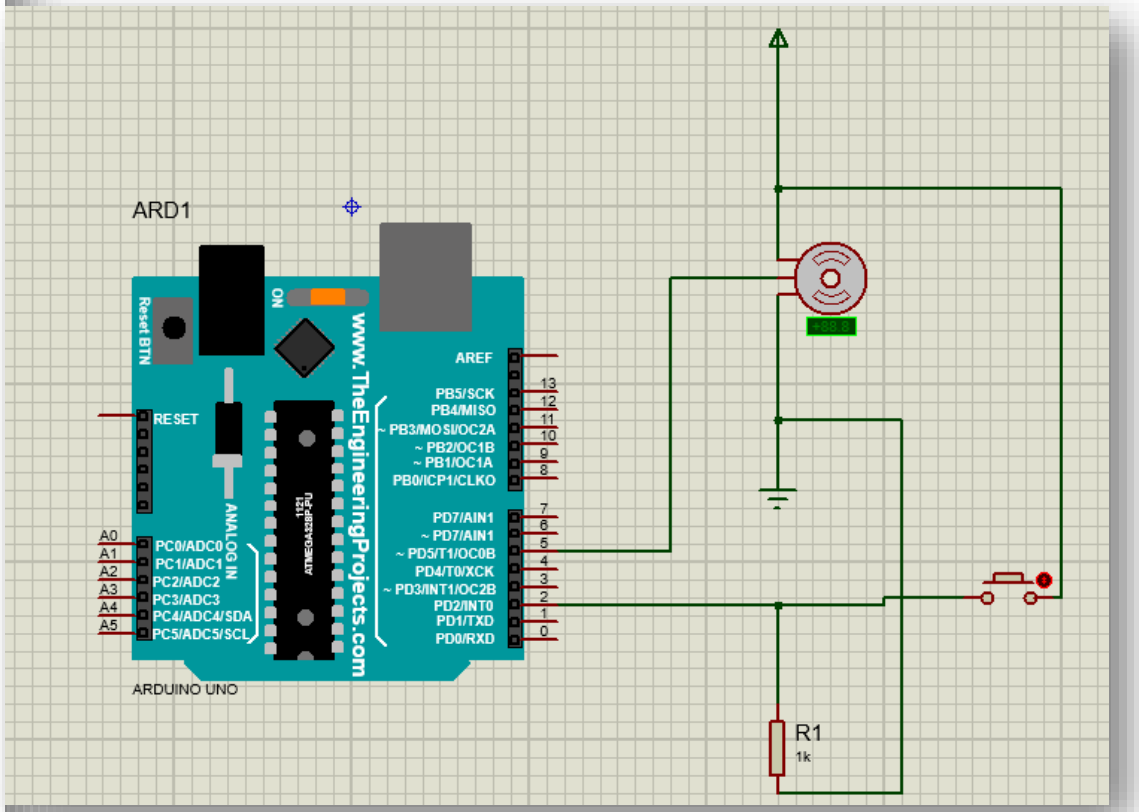

Thank You
(the course has completed)